SENTRAN

Compact S Beam Load Cell

ZASeries

The ZA Series is a versatile high performance strain gage load cell constructed of alloy tool steel. It is designed to accurately measure tension and compression loads in capacity ranges of 0-25 to 0-20,000 lbs.

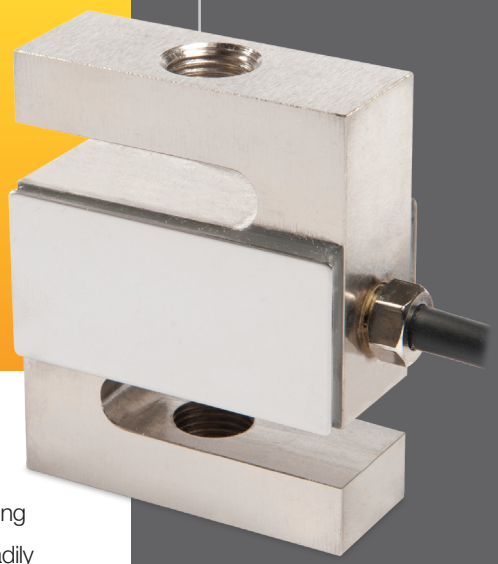

The ZA Series is a high performance, bonded foil strain gage load cell constructed of alloy tool steel. The ZA Series is designed to accurately measure tension and/or compression loads in capacities ranging from 0-25 lbs. to 0-20,000 lbs. The integrated, threaded loading brackets reduce sensitivity to off-center and side loading effects, while making the load cell readily adaptable to in-line measurements. This load cell is Harsh Environment Sealed (IP67-Limited Immersion) by virtue of proprietary, multi-redundant barriers uniquely integrated to protect all internal components. The load cell output signals are calibrated to a close tolerance to facilitate in situ interchangeability and multiple load cell summing applications. The integral premium, instrumentation grade cable features a durable polyurethane-jacket over a tinned-copper braided shield for superior mechanical protection and to minimize the unwanted electrical effects of RFI and EMI. A variety of companion loading accessories include the MA Series Tension Mounts, rod end bearings, eyebolts, load buttons and others. The ZA Series is an ideal choice for measurements in the laboratory, manufacturing and process applications, and for general force measurements and weighing situations where a dependable and versatile load cell solution is needed.

ISO 9001:2008 CERTIFIED

IP 67

FM APPROVED

APPLICATIONS

- Tension/Compression Force Measurements
- Level and Inventory Monitoring
- Tank, Bin and Hopper Weighing
- Belt Conveyer Scales
- Process Control Weighing
- Force/Material Testing
- Dynomometers
- OEM/VAR Solutions

FEATURES

- 25 to 20,000 lbs. Capacities
- 0.02% Accuracy Class - NTEP Grade
- Application Versatility
- Load Introduction Hardware
- Steel Element
- IP67 Environmental Sealing
- Output Matched for Single or Multiple Load Cell Applications
- Two Year Warranty

For more information call **1-888-545-8988**

SENTRAN, LLC 4355 LOWELL STREET, ONTARIO, CA 91761, U.S.A.
888-545-8988 T: 909-605-1544 FAX: 909-605-6305 **www.sentranllc.com**

ZA Series Specifications

Innovative Measurement Solutions

PERFORMANCE	
Rated Capacities [1] (lbs.)	25, 50, 75, 100, 150, 200, 250, 300, 500, 750, 1K, 1.5K, 2K, 2.5K, 3K, 5K, 10K, 15K, 20K
Rated Output (FSO)	3.0 mV/V
Output Tolerance	±0.25 % R.O.
Combined Error Band	≤ 0.03 % FSO
Non-Linearity	≤ 0.03 % FSO
Hysteresis	≤ 0.03 % FSO
Non-Repeatability	≤ 0.02 % FSO
Zero Balance	± 1.0 % FSO
Creep (20 Minutes)	0.03 % of Load

[1] *("K"=Thousand)*

MECHANICAL	
Load Cell Material	Alloy Tool Steel
Load Cell Finish	Electroless Nickel
Safe Overload	Compression 150% FSO Tension 150% FSO Side Load 100% FSO
Ultimate Overload	Compression: 300% FSO Tension: 300% FSO Side Load: 50% FSO
Deflection	See Dimensions Table
Weight	See Dimensions Table

ELECTRICAL	
Input Impedance	385 ± 5 ohms
Output Impedance	350 ± 3 ohms
Insulation Resistance	>5000 Megohms @ 50VDC
Excitation Voltage	10 V AC/DC (15 V maximum)
Cable Color Code	+ Excitation (red) - Excitation (black) + Output (green) - Output (white) Shield (natural)
Cable Type	4-conductor, 22 AWG, Polyurethane Jacket, Tinned Copper Braid, Diameter: 0.187"
Cable Length	See Dimensions Table
Cable Termination	Finished Conductors
Cable Seal	Compression Gland Fitting

ENVIRONMENTAL	
Temperature, Operating	-40 to +140 °F (-20 to +60°C)
Temperature, Compensated	14 to +104 °F (-10 to +40°C)
Temperature, Storage	-60 to +185 °F (-50 to +85°C)
Temperature Effects	Zero < 0.0015% FSO/°F < 0.0026% FSO/°C
Temperature Effects	Output < 0.0008% of Rdg./°F < 0.0014% Rdg./°C
Sealing Rating	IP67; Multi-redundant; Limited Immersion Tolerance
FM Approval	
Intrinsically Safe:	Class I, II, III; Div.1 Groups A-G
Non-Incendive:	Class 1; Div.2 Groups A-D

ZA Typical System Configuration

SENSING LOAD CELL(S)

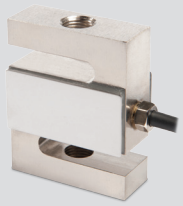

SIGNAL CONDITIONING

Analog Transmitters

Serial Transmitters

Digital Indication

Process Control

Batch Control

Data Acquisition

OUTPUT OPTIONS

- 0-5 VDC
- 0-10VDC
- ±5 VDC
- ±10 VDC
- 4-20 mA
- 0-20 mA
- RS-232
- RS-422
- RS-485
- 20 mA Serial Loop
- Ethernet
- Profibus DP
- DeviceNet
- CANOpen
- ControlNet
- Modbus RTU
- Wireless

ZA Dimensions

Innovative Measurement Solutions

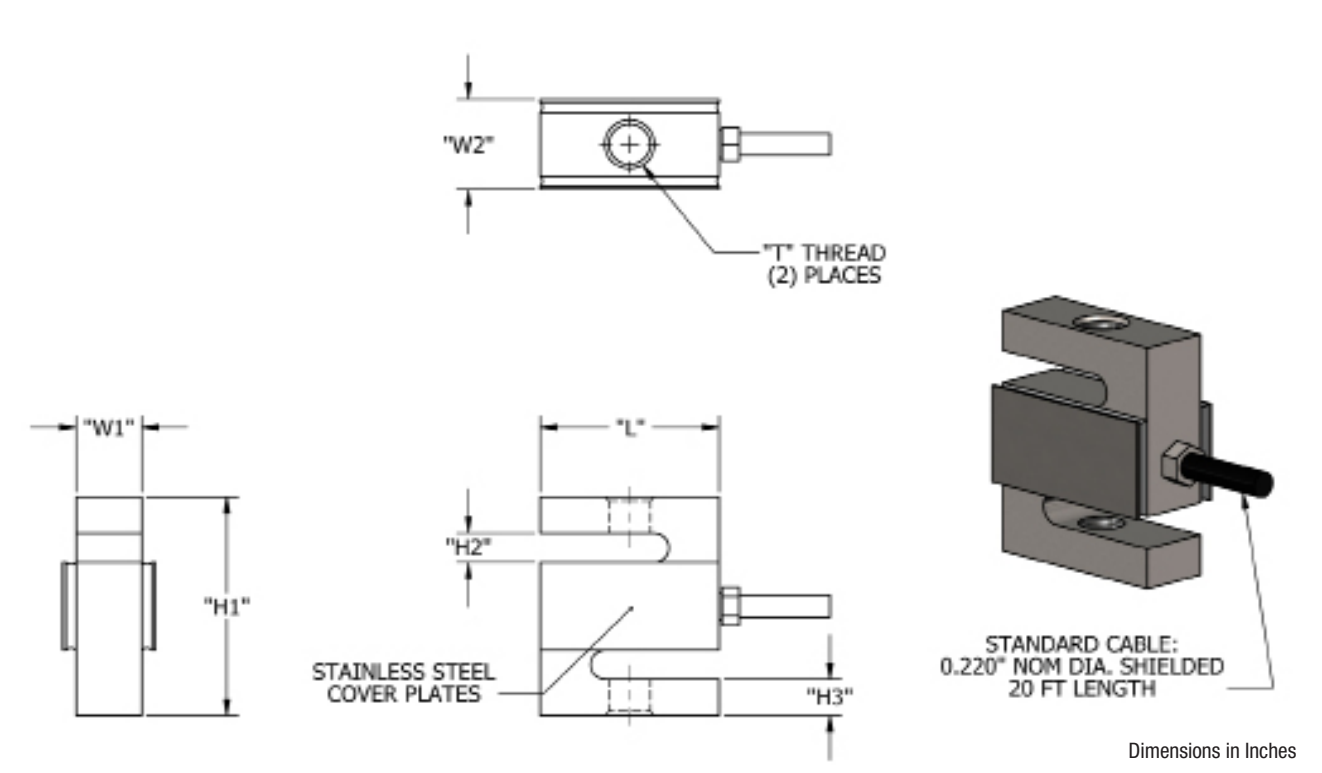

Capacity (LB)	H1	H2	H3	W1	W2	L	T	Deflect	Weight
					DIMENSIONS (INCHES)				
25, 50, 100, 150, 200, 250, 300	2.47	0.37	0.38	0.47	0.72	1.97	1/4-28 UNF-2B	0.010”	1.0 LB
500, 750, 1K, 1.5K	2.47	0.34	0.42	0.72	0.97	1.97	1/2-20 UNF-2B	0.011”	1.5 LBS
2K, 2.5K	2.47	0.24	0.37	0.97	1.22	1.97	1/2-20 UNF-2B	0.012”	2.0 LBS
3K	3.97	0.32	0.72	0.97	1.22	2.97	1/2-20 UNF-2B	0.012”	3.5 LBS
5K	3.97	0.40	0.72	0.97	1.22	2.97	3/4-16 UNF-2B	0.016”	3.5 LBS
7.5K	3.97	0.40	0.72	0.97	1.22	2.97	3/4-16 UNF-2B	0.020”	3.5 LBS
10K	3.97	0.40	0.72	0.97	1.22	2.97	3/4-16 UNF-2B	0.025”	3.5 LBS
15K	5.47	0.60	1.00	1.22	1.47	3.97	1-12 UNF-2B	0.025”	7.0 LBS
20K	6.97	0.76	1.24	1.97	2.22	4.97	1 1/4-12 UNF-2B	0.025”	16.0 LBS

ZA Wiring Diagram

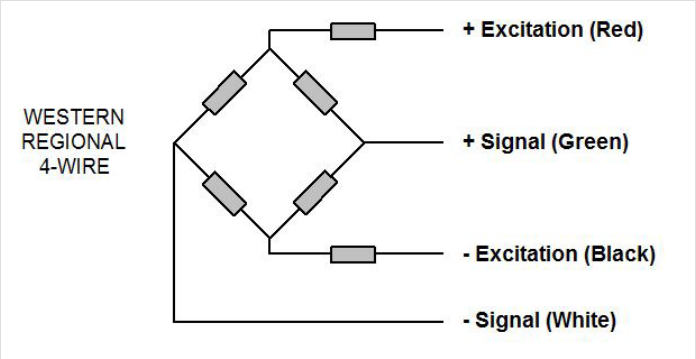

Universal Measurement Components

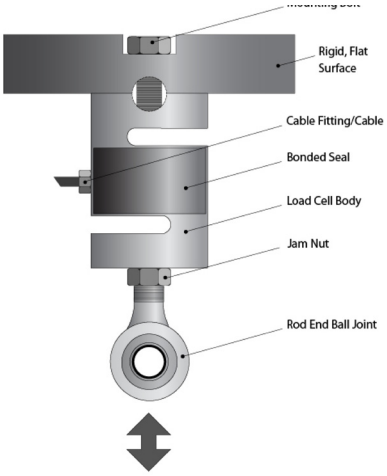

Compression Installation Components

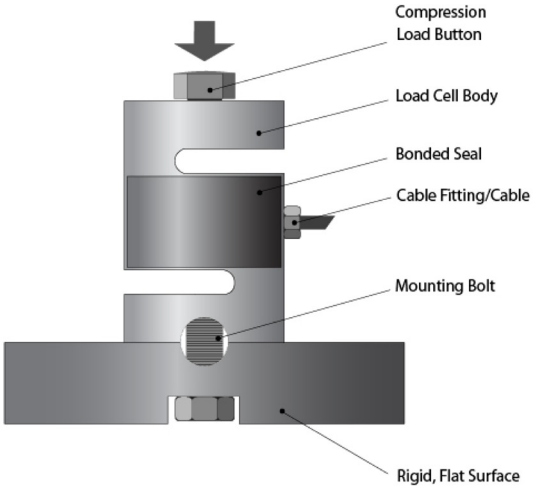

Universal Measurement Components

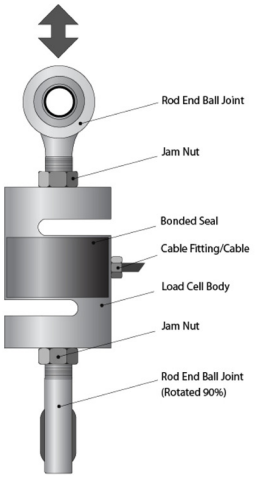

Load Test Stand

Dynamometer

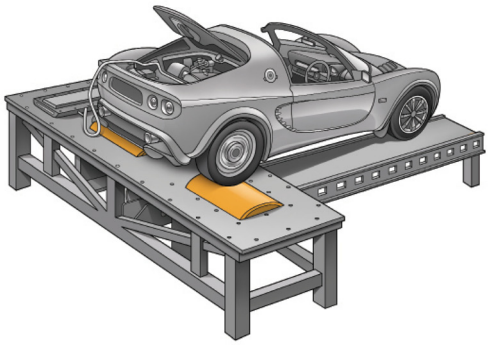

Weigh Hopper

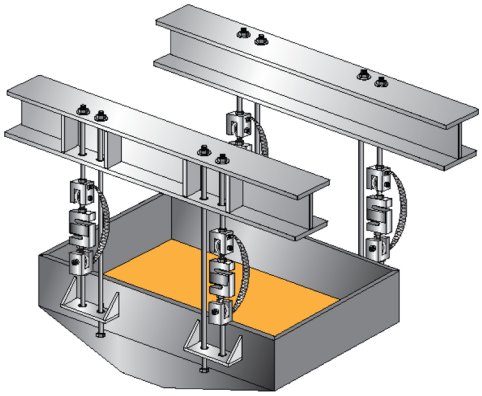

Available Options

- MA Series Tension Cell Mount
- Companion Loading Hardware
  - Eyebolts
  - Rod End Bearings
  - Load Buttons
  - Eye Nuts
  - Connecting Links
  - High Temperature Operation (to 400°F)
- In-Line Analog or Serial Transmitters
- Display/Control Instrumentation
- Junction/Summing Boxes
- Wireless Operation
- MS Connectors
- Shunt Calibration
- Use and Installation Guide
- Custom and OEM Solutions

Application Recommendations / Suggestions

- The Z Series Load Cells are universal by design, meaning they are compatible with tension, compression and tension/compression force measurement applications. The most common loading methods are via a load button, rod end bearings, or by utilizing the MA Series Weigh Module assembly. Sentran offers a variety of additional optional loading hardware such as eyebolts, connecting links and similar components that contribute to ease of installation, ease of use and optimum performance.
- The Z Series Load Cell is an ideal solution for single and multiple weighing or force measurement applications ranging from Universal Force/Material Testing Machines to suspended weighing applications typical of many in-process and storage tanks, bins and hoppers.
- In multiple load cell applications involving four or more supports, use care to ensure that the load on each load cell support varies by no more than 20% over the complete loading range. Balancing of the load can be accomplished by using shims, turnbuckles or similar mechanical components to achieve satisfactory load distribution.
- When using eyebolts, rod end bearings or the MA Series mounting assembly on both ends of the load cell, orient these components perpendicular relative to one another, as shown in the Installation Examples illustrations in this document.
- The load cell cable must be arranged such that it does not influence measurements by virtue of the stiffness of the cable. Looping a section of the cable or using some other means to provide slack in the cable will usually accomplish this. Lower capacity load cells are particularly sensitive to this issue. After installation is complete, gently move the cable back and forth. If the output of the load cell does not change, there is no cable influence.
- Z Series S Beams output signals are calibrated to a close output tolerance to facilitate in situ interchangeability and multiple load cell summing applications. However, the use of a Sentran load cell signal trimming summing junction box is recommended for achieving optimum performance and minimum sensitivity to changes in load distribution in multiple load cell applications.
- Z Series S Beam Load Cells are available in many capacity ranges. These load cells are designed to be used over the complete range of “no load” (0) up to the rated capacity. For example, 1,000 lbs. rated capacity Z Series S Beams are designed to be used for measurements within the range of 0 to 1,000 lbs. These load cells can be safely loaded to 150% of rated capacity without affecting the load cell performance within the capacity range.
- The reason for the variety of capacities is to allow the user to select the most ideal capacity for a given application. The most ideal capacity is one in which at least 80% of the capacity range is utilized at some point in the measurement process, without exceeding the rated capacity. This allows the load cell to deliver the highest signal to load ratio, and therefore the highest resolution and most stable measurement. There are other factors to consider, such as excitation voltage, but correct “sizing” of the load cell is the first step. Both the dead load and the live load need to be considered in determining the gross load and the load cell capacity.
- Contact Sentran’s expert Applications Specialists for additional professional guidance.

Commercial Information & Precautions

- Do not exceed specified Maximum Load Limits.
- The Safe Load Limit is the point to which normal loading will not cause the load cell to experience an excessive zero shift or a degradation in performance.
- Use reasonable care when applying load to any load cell. Load limits can be exceeded due to shock loading (i.e. dropping a load onto a load cell), off axis loading, side loading and similar loading conditions that are beyond design capabilities.
- The structural integrity of all load bearing components in any load cell system should be designed with safety redundant load paths. (Overload stops, overhead load arrestors, etc.)
- The surfaces to which the load cell(s) is attached and/or is reacting against must be of sufficient structural integrity to carry loads up to and exceeding the ultimate ratings of the load cell(s) being used, while also taking into account any companion hardware being used in conjunction with the load cell.
- To ensure optimum performance, all measuring system cabling should be run through dedicated conduit when available. Avoid proximity to electrical noise sources and use of “dirty” power sources.
- The load cell cable shield should be connected to a dedicated instrument ground point only.
- Force measurement and weighing applications have numerous application-specific considerations to be addressed both mechanically and electrically. Therefore, installation of all system components are the responsibility of the user and should always be approved by a qualified, professional engineer. Any information provided by Sentran, LLC is intended only as informational and does not constitute a formal recommendation for the use of any product for any application.
- Sentran offers application/installation/use guides on request for most standard products. Please contact your Sentran representative for assistance, or visit our technical library resource at www.sentranllc.com.

Legal Disclaimer

ALL PRODUCTS, PRODUCT SPECIFICATIONS AND DATA ARE SUBJECT TO CHANGE WITHOUT NOTICE.
Sentran, LLC, Incorporated, its affiliates, agents, and employees, and all persons acting on its or their behalf (collectively, “Sentran, LLC”), disclaim any and all liability for any errors, inaccuracies or incompleteness contained herein or in any other disclosure relating to any product. The product specifications do not expand or otherwise modify Sentran, LLC’s terms and conditions of purchase, including but not limited to, the warranty expressed therein. Sentran, LLC makes no warranty, representation or guarantee other than as set forth in the terms and conditions of purchase. To the maximum extent permitted by applicable law, Sentran, LLC, disclaims (i) any and all liability arising out of the application or use of any product, (ii) any and all liability, including without limitation special, consequential or incidental damages, and (iii) any and all implied warranties, including warranties of fitness for particular purpose, non-infringement and merchantability. Information provided in datasheets and/or specifications may vary from actual results in different applications and performance may vary over time. Statements regarding the suitability of products for certain types of applications are based on Sentran, LLC’s knowledge of typical requirements that are often placed on Sentran, LLC products. It is the customer’s responsibility to validate that a particular product with the properties described in the product specification is suitable for use in a particular application. No license, express, implied, or otherwise, to any intellectual property rights is granted by this document, or by any conduct of Sentran, LLC. The products shown herein are not designed for use in life-saving or life-sustaining applications unless otherwise expressly indicated. Customers using or selling Sentran, LLC products not expressly indicated for use in such applications do so entirely at their own risk and agree to fully indemnify Sentran, LLC for any damages arising or resulting from such use or sale. Please contact authorized Sentran, LLC personnel to obtain written terms and conditions regarding products designed for such applications.

SENTRAN

SENTRAN, LLC
4355 LOWELL STREET
ONTARIO, CA 91761-2225, U.S.A.
T: 909-605-1544 F: 909-605-6305
www.sentranllc.com

Innovative Measurement Solutions

RoHS COMPLIANT